LOGMASTER LM-EFR

GENERATOR EXCITER FAILURE RELAY

FEATURES:

- Stand alone detection of generator excitation system failures
- Faster response than mho/ impedance type relays
- Direct monitoring of both field voltage and generator terminal voltage
- Two stages of detection for alarm and trip functions
- Two ALARM relay contacts and two TRIP relay contacts
- Built-in universal power supply
- NEMA 4X fiberglass enclosure

BROY ENGINEERING LIMITED
TORONTO, ONTARIO

DESCRIPTION

The Logmaster Exciter Failure Relay, LM-EFR, is a new solid state protection relay for generator excitation systems. This relay contains two stages of excitation system monitoring that can be used on all types and sizes of generators. The Logmaster LM-EFR relay can accept a station power supply between 25 and 250 volts AC or DC. This relay is enclosed in a rugged NEMA 4X fiberglass enclosure that can be mounted to any available flat surface in the exciter cubicle.

By directly monitoring the field voltage and terminal voltage, the relay uses the simple logic that these two signals should always work in opposite direction. That is, when terminal voltage is low, field voltage should be high to attempt to correct the situation, and vice versa. When both signals are low or both are high, something has gone wrong in the excitation system/ voltage regulator channel and some action is required immediately. With the two detection stages in the LM-EFR, the first stage can be used to switch to an alternate regulating channel. If the problem is not fixed after an adjustable time delay, the generator must be removed from the grid. This direct method of failure detection is faster and more reliable than an offset mho relay and allows the fast removal of a faulty unit from the grid, thus minimizing the impact of the failure on the power grid.

SPECIFICATION HIGHLIGHTS

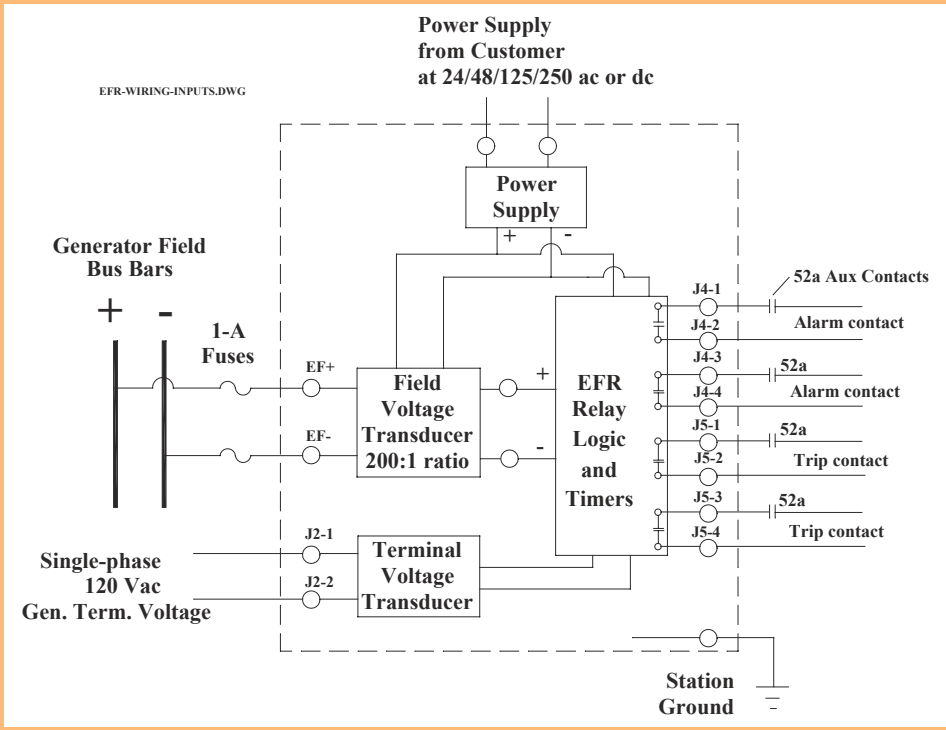

Nominal generator terminal voltage:
100 to 130 Vac, 50 or 60 Hz

Nominal generator full load field voltage:
50 to 600 Vdc

Ceiling field voltage:
100 to 1500 Vdc

Field voltage source:
rotating dc or ac exciters, thyristor systems, amplidyne

Fully tested for surge withstand and radio interference immunity.

BROY ENGINEERING LIMITED

92 Advance Road, Toronto, Ontario M8Z 2T7
Telephone (416) 231-5535 FAX (416) 231-6184
E-MAIL: peter@broy.com
www.broy.com